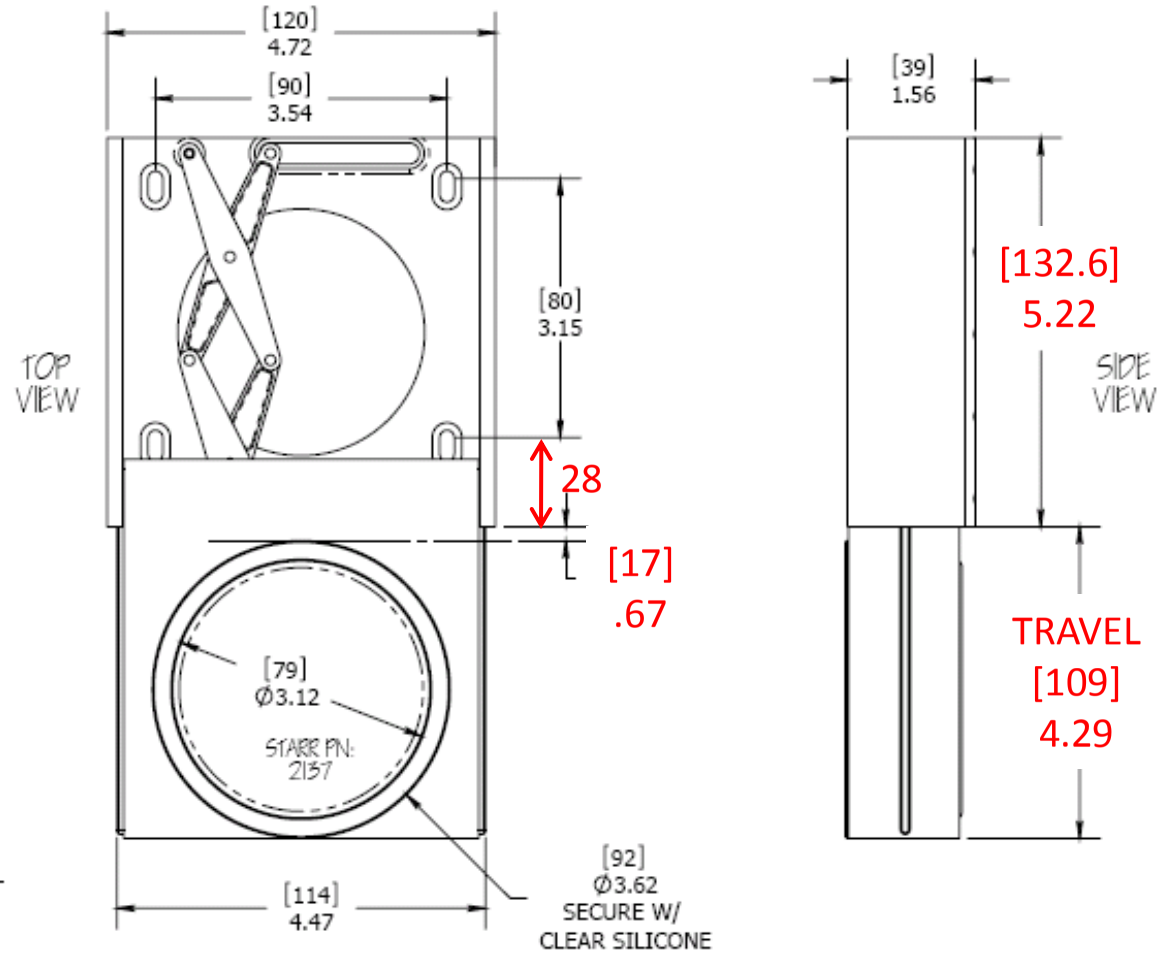

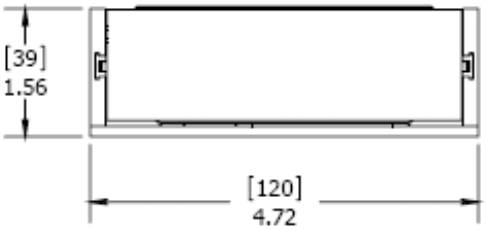

FRONT VIEW

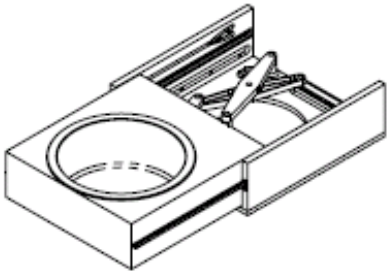

UNLESS OTHERWISE SPECIFIED:
DIMENSIONS ARE IN INCHES
SURFACE FINISH: 32 RMA
TOLERANCES: LINEAR: X.XX= ±0.010", X.XXX= ±0.005"
ANGULAR: ± 1°

FINISH:

DEBUR AND BREAK SHARP EDGES

Saint Louis Designs, Inc
209 E. Ben White Blvd, Ste 107, Austin, TX 78704
512-472-4711, www.saintlouisdesigns.com

	NAME	SIGNATURE	DATE
DRAWN	MSTL		1/2010
CHK'D			
APPV'D			
MFG			
Q.A			

TITLE:
CUP INSERT TRAY, RETRACTABLE
USE STARR PN: 2137 X 1.38

MATERIAL:

WEIGHT:

DWG NO. 72137

A4

SCALE: 1:2

SHEET 1 OF 1